One Technology Way · P.O. Box 9106 · Norwood, MA 02062-9106 · Tel: 781.329.4700 · Fax: 781.461.3113 · www.analog.com

Evaluation Board for the AD8418 Current Sense Amplifier

Features

Enables quick breadboarding/protoyping
Easily configurable for unidirectional or bidirectional operation
Includes provision for current sense resistor
Easy connection to test equipment

General Description

The AD8418-EVALZ is designed to aid in the evaluation of current sense amplifiers. The board is designed for easy configuration of different modes of operation. It can readily be mounted with a current sense resistor having a maximum standard size of 2818, and allows for flexibility with loads.

The AD8418-EVALZ accommodates the AD8418 in an MSOP package. The data sheet for this device should be consulted in conjunction with this evaluation board user guide.

AD8418 Evaluation Board

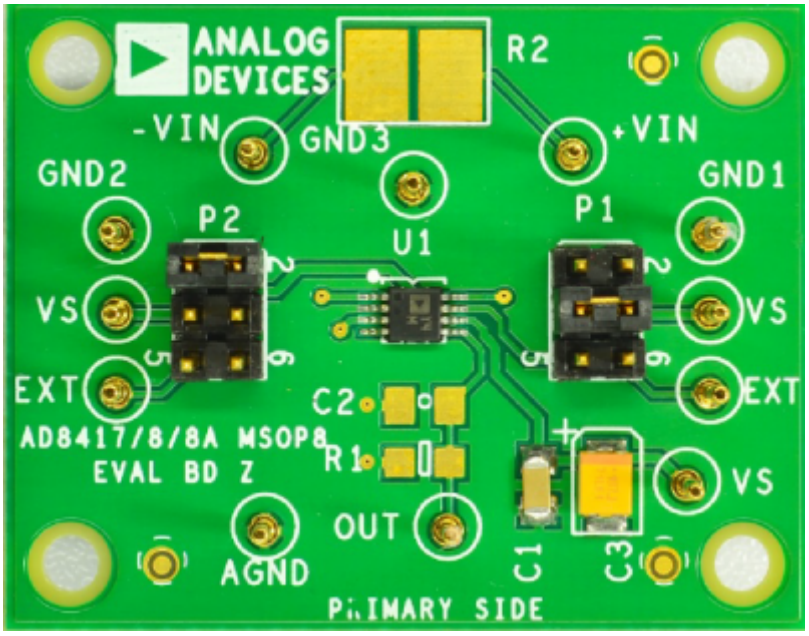

Figure 1. Component Side

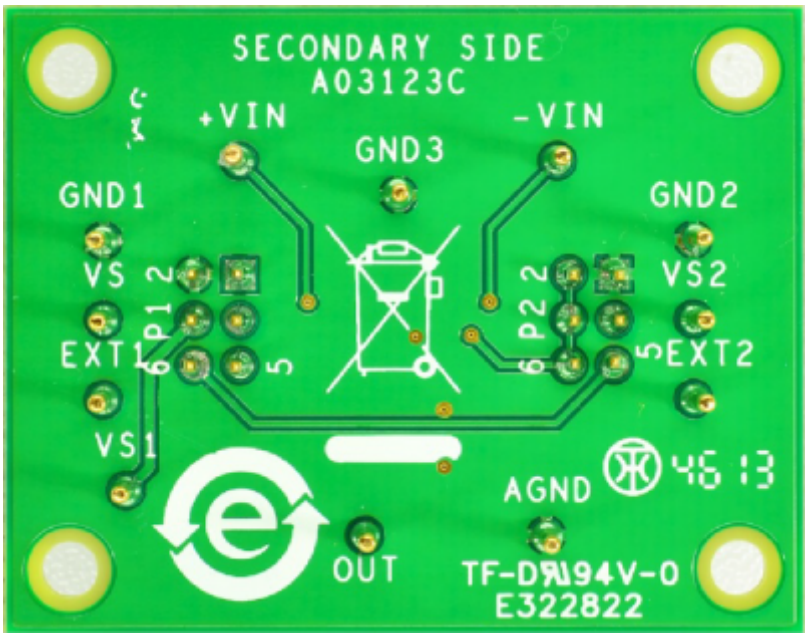

Figure 2. Circuit Side

Evaluation Board Hardware

Power Supplies

The AD8418 operates with a single supply ranging from 2.7 V to 5.5 V. Power is applied to the V_S pin.

Decoupling capacitors of 10 µF and 0.1 µF come preinstalled on the board for ready operation.

Components

The AD8418 is useful for a variety of current monitoring applications. The board has a provision for a current shunt resistor with a maximum standard size of 2818. There are also provisions for capacitive and resistive loads at the output with 1206 footprints.

Setting the Reference Voltage

The AD8418 can be configured for unidirectional or bidirectional operation. The evaluation board can easily be set for these operations using Header P1 and Header P2. P1 sets the voltage at REF1, whereas P2 sets the voltage at REF2.

Unidirectional Operation

For unidirectional operation, the output can be set at the negative rail (near ground) or at the positive rail (near V_S) when the differential input is 0 V. To set the evaluation board for a ground referenced output, place the jumpers for Header P1 and Header P2 at GND. For a V_S referenced output, place the jumpers for both headers at V_S.

Bidirectional Operation

For bidirectional operation, the output is typically set at half scale for equal range in both directions. To configure this on the evaluation board, place the jumper for P1 at V_S and place the jumper for P2 at GND. This configuration biases the output to $V_S/2$.

External Referenced Output

An external supply may also be used to set the reference voltage by placing the jumpers at EXT for both headers and applying a voltage to any one of the EXT pins. This configuration biases the output to the external supply.

The external supply can also be divided by 2. For this reference level, place the jumper for P1 at EXT, place the jumper for P2 at GND, and apply the external supply to the EXT pin near P1.

By default, the output of the evaluation board is biased at midsupply, as shown in Figure 1.

Evaluation Board Schematic

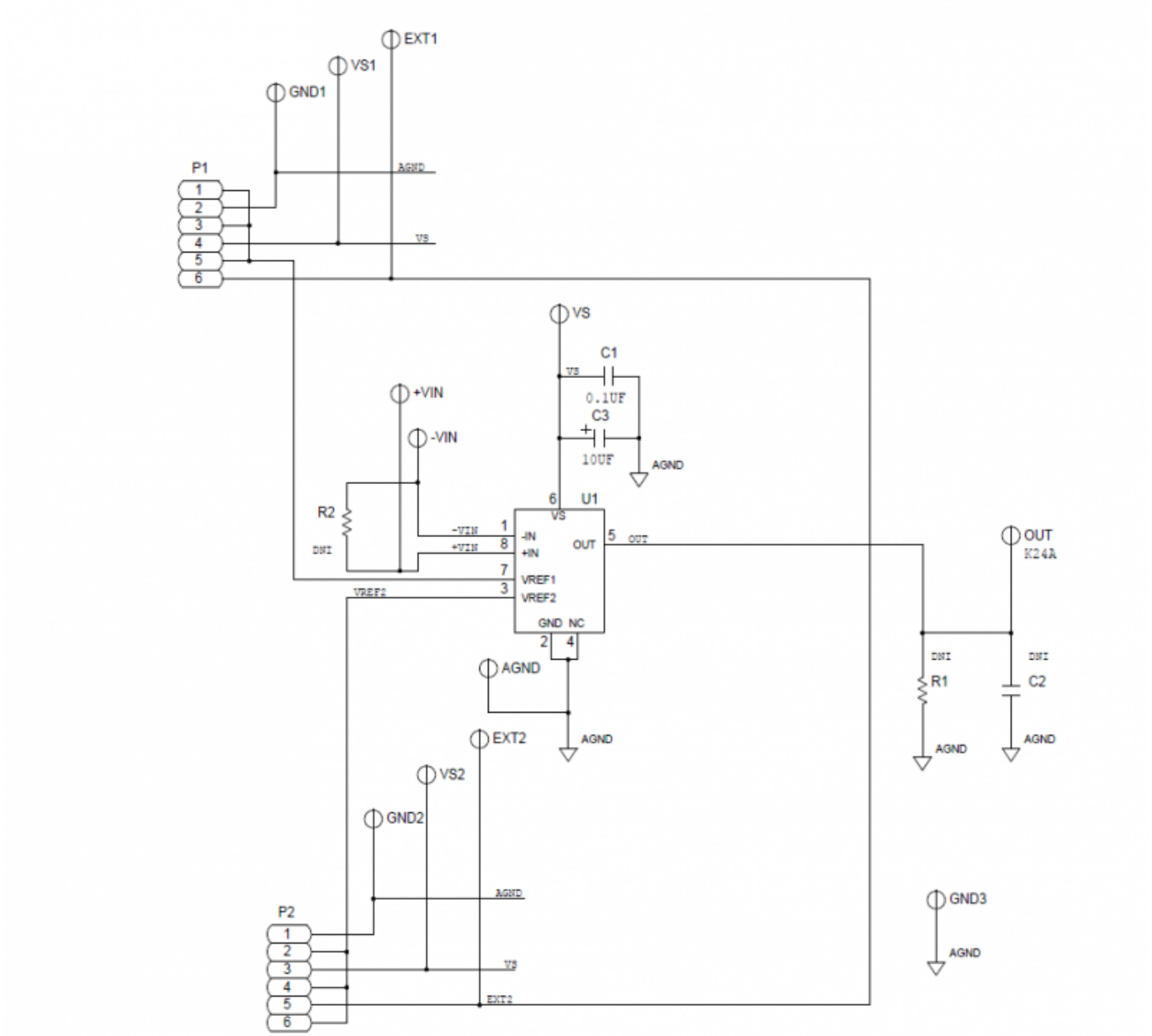

Figure 3. Evaluation Board Schematic

Evaluation Board Layout

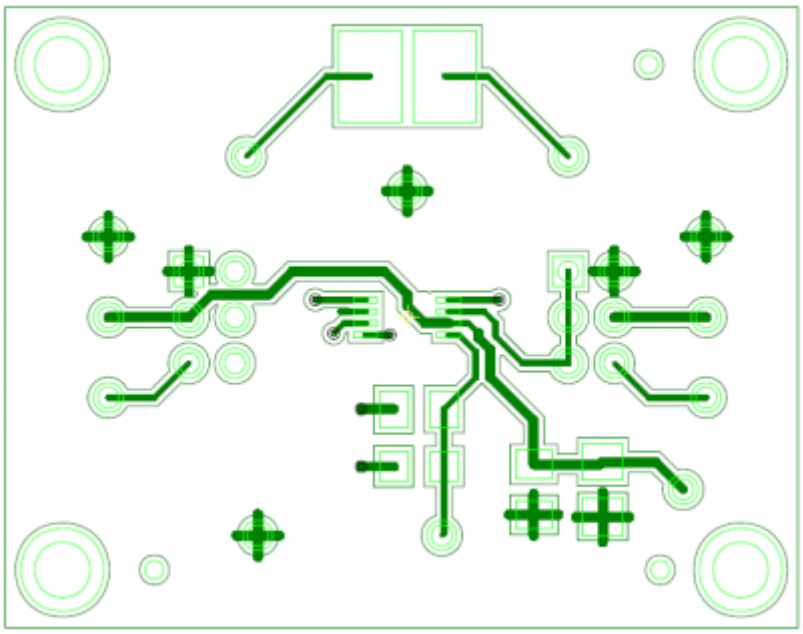

Figure 4. Component Side Layout

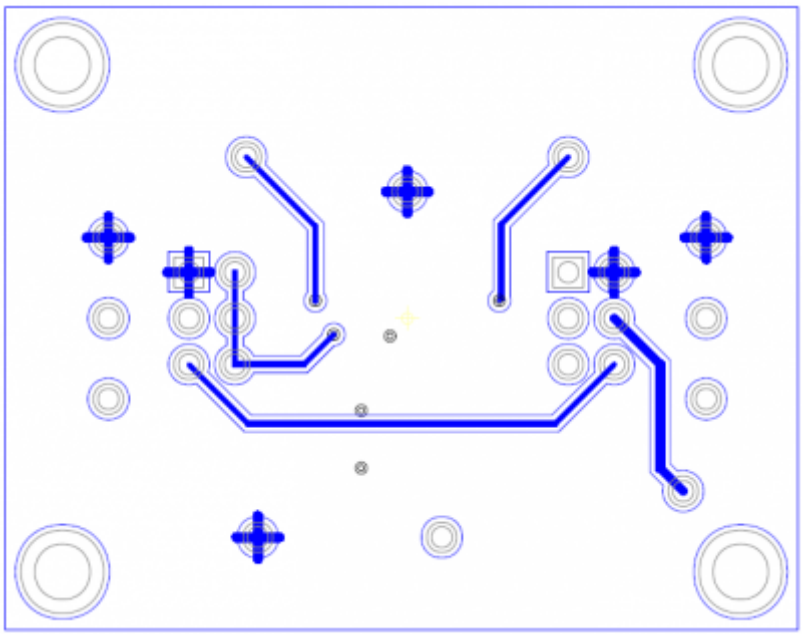

Figure 5. Circuit Side Layout

Ordering Information

Bill of Materials

Table 1. Bill of Materials

Quantity	Reference Designator	Package	Description
1	C1	C1206	Capacitor, 0.1 µF
1	C3	C3528	Capacitor, 10 µF
2	P1, P2	CNSAMTEC2X3H330LD36	6-pin header
1	U1	8-lead MSOP	AD8418WBRMZ

© Analog Devices, Inc. All rights reserved. Trademarks and registered trademarks are the property of their respective owners.

www.analog.com